BRITISH STANDARD

BS EN 12277:2007

Mountaineering equipment — Harnesses — Safety requirements and test methods

The European Standard EN 12277:2007 has the status of a British Standard

ICS 97.220.40

British Standards

National foreword

This British Standard was published by BSI. It is the UK implementation of EN 12277:2007. It supersedes BS EN 12277:1998 which is withdrawn.

The UK participation in its preparation was entrusted by Technical Committee SW/136, Sports, playground and other recreational equipment, to Subcommittee SW/136/5, Mountaineering equipment.

A list of organizations represented on this committee can be obtained on request to its secretary.

This publication does not purport to include all the necessary provisions of a contract. Users are responsible for its correct application.

Compliance with a British Standard cannot confer immunity from legal obligations.

This British Standard was published under the authority of the Standards Policy and Strategy Committee on 30 April 2007

ISBN 978 0 580 50638 3

Amendments issued since publication

Amd. No.	Date	Comments

EUROPEAN STANDARD

NORME EUROPÉENNE

EUROPÄISCHE NORM

EN 12277

February 2007

ICS 97.220.40

Supersedes EN 12277:1998

English Version

Mountaineering equipment - Harnesses - Safety requirements and test methods

Equipement d'alpinisme et d'escalade - Harnais - Exigences de sécurité et méthodes d'essai

Bergsteigerausrüstung - Anseilgurte - Sicherheitstechnische Anforderungen und Prüfverfahren

This European Standard was approved by CEN on 23 December 2006.

CEN members are bound to comply with the CEN/CENELEC Internal Regulations which stipulate the conditions for giving this European Standard the status of a national standard without any alteration. Up-to-date lists and bibliographical references concerning such national standards may be obtained on application to the CEN Management Centre or to any CEN member.

This European Standard exists in three official versions (English, French, German). A version in any other language made by translation under the responsibility of a CEN member into its own language and notified to the CEN Management Centre has the same status as the official versions.

CEN members are the national standards bodies of Austria, Belgium, Bulgaria, Cyprus, Czech Republic, Denmark, Estonia, Finland, France, Germany, Greece, Hungary, Iceland, Ireland, Italy, Latvia, Lithuania, Luxembourg, Malta, Netherlands, Norway, Poland, Portugal, Romania, Slovakia, Slovenia, Spain, Sweden, Switzerland and United Kingdom.

EUROPEAN COMMITTEE FOR STANDARDIZATION
COMITÉ EUROPÉEN DE NORMALISATION
EUROPÄISCHES KOMITEE FÜR NORMUNG

Management Centre: rue de Stassart, 36 B-1050 Brussels

Ref. No. EN 12277:2007: E

Contents

Page

Foreword 3

Introduction 3

1 Scope 5

2 Normative references 5

3 Terms and definitions 5

4 Safety requirements 6
4.1 General 6
4.2 Strength 7

5 Test methods 7
5.1 Conditioning and test conditions 7
5.2 Procedure 8

6 Marking 10

7 Information supplied by the manufacturer 10

Annex A (informative) **Standards on mountaineering equipment** 14

Annex ZA (informative) **Relationship between this European Standard and the Essential Requirements of EU Directive 89/686/EEC** 15

Foreword

This document (EN 12277:2007) has been prepared by the Technical Committee CEN/TC 136 "Sports, playground and other recreational equipment", the secretariat of which is held by DIN.

This European Standard shall be given the status of a national standard, either by publication of an identical text or by endorsement, at the latest by August 2007, and conflicting national standards shall be withdrawn at the latest by August 2007.

This document supersedes EN 12277:1998.

This document has been prepared under a mandate given to CEN by the European Commission and the European Free Trade Association to support Essential Requirements of EU Directive 89/686/EEC.

For relationship with EU Directives, see informative Annex ZA, which is an integral part of this document.

According to the CEN/CENELEC Internal Regulations, the national standards organizations of the following countries are bound to implement this European Standard: : Austria, Belgium, Bulgaria, Cyprus, Czech Republic, Denmark, Estonia, Finland, France, Germany, Greece, Hungary, Iceland, Ireland, Italy, Latvia, Lithuania, Luxembourg, Malta, Netherlands, Norway, Poland, Portugal, Romania, Slovakia, Slovenia, Spain, Sweden, Switzerland and United Kingdom.

Introduction

The text of this European Standard is based on the former UIAA-Standard E (Union Internationale des Associations d'Alpinisme), which has been prepared with international participation.

This European Standard is one of a series of standards for mountaineering equipment, see Annex A.

1 Scope

This European Standard specifies safety requirements and test methods for harnesses for use in mountaineering including climbing. It is applicable to full body harnesses, small body harnesses, sit harnesses and chest harnesses.

2 Normative references

The following referenced documents are indispensable for the application of this document. For dated references, only the edition cited applies. For undated references, the latest edition of the referenced document (including any amendments) applies.

EN 892, *Mountaineering equipment — Dynamic mountaineering ropes — Safety requirements and test methods*

EN ISO 139, *Textiles — Standard atmospheres for conditioning and testing (ISO 139:2005)*

3 Terms and definitions

For the purposes of this document, the following terms and definitions apply.

3.1
harness
assembly of narrow textile fabric(s) (hereafter referred to as tape), adjusting device(s) or other elements which fit around the body to support it in a hanging position after a fall

3.1.1
full body harness (type A)
harness which fits at least around the upper part of the body and the thighs.

NOTE This type of harness will support an unconscious person in a head up position

3.1.2
small body harness (type B)
full body harness according to type A intended for people up to 40 kg.

NOTE This type of harness is particularly suitable for people with an undeveloped or ill defined waistline

3.1.3
sit harness (type C)
harness in the form of a waist belt and connecting sub-pelvic support suitably arranged to support a conscious body in a sitting position

3.1.4
chest harness (type D)
harness which fits around the upper part of the body around the chest and under the armpits.

NOTE 1 This type of harness alone cannot support a person in the hanging position without permanent injury in less than one minute

NOTE 2 A type D harness should only be used in combination with a type C harness.

3.2
load transmitting part to the body
part of the harness which transmit load in the tests in accordance with 5.2.4, 5.2.5, 5.2.6 or 5.2.7 as appropriate

NOTE The following parts of the harness in contact with the dummy during the test are not defined as load transmitting parts to the body: shoulder straps, the part of the thighs excluded in Figure 1 and accessory parts.

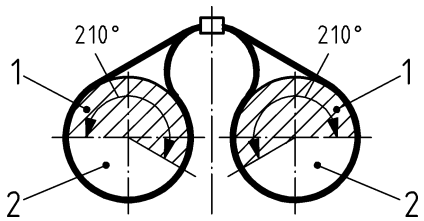

Key
1 part not transmitting load to the body
2 load transmitting part to the body

Figure 1 — Parts not transmitting load to the body in leg loops of a harness

3.3
part not transmitting load to the body
part of the harness not covered by load transmitting part to the body

3.4
adjusting device
device which allows adjustment to be made to the harness(es) to the needs of the wearer

3.5
rope attachment point
part of the harness intended for the attachment of the rope

NOTE Harnesses can have several attachment points.

3.6
belt
part of the harness which is around the waist

4 Safety requirements

4.1 General

4.1.1 Dimensions of tapes

For ergonomic reasons the tape assembly shall comply with the following dimensions:

a) load transmitting parts to the body in contact with the dummy during the tests in accordance with 5.2.4.2, 5.2.5.2, 5.2.6.2 or 5.2.7.2 as appropriate:

   i) harnesses of type B and D: 28 mm minimum;
   ii) all other types of harnesses: 43 mm minimum;

b) shoulder straps:

i) harnesses of type B: 23 mm minimum;
ii) all other types of harnesses: 28 mm minimum;

c) all other parts: no requirements specified.

4.1.2 Stability of tapes

When shuttleless loom webbing is used, the weft shall be locked by an additional locking thread or by any other system, which guarantees that the edges cannot become unravelled when one of the yarns breaks.

4.1.3 Threads

Where stitching is used to provide safety and strength (e.g. in joints) the visible area of stitching shall contrast with the tape in colour or surface appearance.

4.1.4 Components

Any component that can come into contact with the user or any textile part shall be free from burrs and sharp edges.

4.2 Strength

4.2.1 When tested in accordance with 5.2.4, 5.2.5, 5.2.6.3, 5.2.6.4 or 5.2.7 no load transmitting part to the body shall break completely. In addition the dummy shall not be released from the harness and no load bearing buckles or adjusting devices shall slip more than 20 mm.

4.2.2 Any loop or combination of loops which are specified in the instructions for use for abseiling shall pass the tests in accordance with 5.2.4.3, 5.2.5.3 or 5.2.6.3 as appropriate.

4.2.3 If there are multiple rope attachment points (for different sizes) the tests in accordance with 5.2.4, 5.2.5, 5.2.6 or 5.2.7 shall be repeated as appropriate for each size as specified in the information to be supplied.

NOTE Second and subsequent samples can be necessary.

4.2.4 If a harness of type B is adjustable, the range of adjustments shall be within the maximum and minimum ranges claimed on the label (in accordance with Clause 6). This shall be checked, after each of the adjustments, in accordance with 5.2.1.

4.2.5 If the type A or type B harness can be divided into a type C and a type D harness, each component which has a rope attachment point shall meet the requirements of this European Standard.

5 Test methods

5.1 Conditioning and test conditions

Condition the test samples in accordance with EN ISO 139.

Tests may then be done outside the conditioning room, but the temperature shall be (23 ± 5) °C and the tests shall begin within 5 min of removal from the conditioning room.

5.2 Procedure

5.2.1 General

Verify the requirements according to 4.1.1 and 4.1.4 by physical and tactile examination and by measuring with the harness on the dummy loaded in accordance with 5.2.4.2, 5.2.5.2, 5.2.6.2 or 5.2.7.2. For the width in 4.1.1 the measurements shall be made in three locations per dimension.

5.2.2 Stability of tapes

Check the requirements according to 4.1.2 using a test sample of 100 mm minimum length and cut one warp and one weft thread on each type of load bearing tape in the harness.

5.2.3 Threads

Check by visual examination that the requirements specified in 4.1.3 are met.

5.2.4 Type A harnesses

5.2.4.1 Put the harness on a rigid test dummy according to Figure 2 and attach it with a single rope, according to EN 892, to the test machine in accordance with the instructions for use.

5.2.4.2 Load the harness gradually up to (800 ± 10) N in the head up position of the dummy. Under this load, the rope attachment points should be placed approximately symmetrically about the plane of symmetry of the dummy.

5.2.4.3 In the head up position of the dummy, mark the tape at the outer edge of any load bearing buckle or adjusting device and apply a force increasing gradually to ($15^{+0,3}_{0}$) kN over a period of (2 ± 0,25) min. Hold this force for (1 ± 0,25) min and then release the tension completely over a maximum of 1 min. Reapply the force immediately and increase gradually to ($15^{+0,3}_{0}$) kN as before and hold the force for (3 ± 0,25) min before release. After release mark the tape at the outer edge of any load bearing buckle or adjusting device. Undo the load bearing buckle or adjusting device and measure the distance between the two marks.

5.2.4.4 In the head down position of the dummy (see Figure 3), mark the tape at the outer edge of any load bearing buckle or adjusting device and apply a force increasing gradually to ($10^{+0,2}_{0}$) kN over a period of (2 ± 0,25) min. Hold this force for (1 ± 0,25) min and then release the tension completely over a maximum of 1 min. Reapply the force immediately and increase gradually to ($10^{+0,3}_{0}$) kN as before and hold the force for (3 ± 0,25) min before release. After release mark the tape at the outer edge of any load bearing buckle or adjusting device. Undo the load bearing buckle or adjusting device and measure the distance between the two marks.

5.2.5 Type B harnesses

5.2.5.1 Put the harness on a rigid test dummy according to Figure 3 and attach it with a single rope, according to EN 892, to the test machine in accordance with the instructions for use.

5.2.5.2 Load the harness gradually up to (500 ± 10) N in the head up position of the dummy. Under this load, the rope attachment points should be placed approximately symmetrically about the plane of symmetry of the dummy.

5.2.5.3 In the head up position of the dummy, mark the tape at the outer edge of any load bearing buckle or adjusting device and apply a force increasing gradually to ($10^{+0,2}_{0}$) kN over a period of (2 ± 0,25) min. Hold this force for (1 ± 0,25) min and then release the tension completely over a maximum of 1 min. Reapply the

force immediately and increase gradually to ($10^{+0,3}_{0}$) kN as before and hold the force for (3 ± 0,25) min before release. After release mark the tape at the outer edge of any load bearing buckle or adjusting device. Undo the load bearing buckle or adjusting device and measure the distance between the two marks.

5.2.5.4 In the head down position of the dummy, mark the tape at the outer edge of any load bearing buckle or adjusting device and apply a force increasing gradually to ($7^{+0,2}_{0}$) kN over a period of (2 ± 0,25) min. Hold this force for (1 ± 0,25) min and then release the tension completely over a maximum of 1 min. Reapply the force immediately and increase gradually to ($7^{+0,2}_{0}$) kN as before and hold the force for (3 ± 0,25) min before release. After release mark the tape at the outer edge of any load bearing buckle or adjusting device. Undo the load bearing buckle or adjusting device and measure the distance between the two marks.

5.2.6 Type C harnesses

5.2.6.1 Put the harness on a rigid test dummy according to Figure 2 and attach it with a single rope, according to EN 892, to the test machine in accordance with the instructions for use.

5.2.6.2 Load the harness gradually up to (800 ± 10) N in the head up position of the dummy. Under this load, the rope attachment points should be placed approximately symmetrically about the plane of symmetry of the dummy.

5.2.6.3 In the head up position of the dummy mark the tape at the outer edge of any load bearing buckle or adjusting device and apply a force increasing gradually to ($15^{+0,3}_{0}$) kN over a period of (2 ± 0,25) min. Hold this force for (1 ± 0,25) min and then release the tension completely over a maximum of 1 min. Reapply the force immediately and increase gradually to ($15^{+0,3}_{0}$) kN as before and hold the force for (3 ± 0,25) min before release. After release mark the tape at the outer edge of any load bearing buckle or adjusting device. Undo the load bearing buckle or adjusting device and measure the distance between the two marks.

5.2.6.4 For the belt test (see Figure 4) apply a force increasing gradually to ($1^{+0,1}_{0}$) kN over a period of (1 ± 0,25) min. Mark the tape at the outer edge of any load bearing buckle or adjusting device. Then increase the force gradually to ($10^{+0,1}_{0}$) kN over a period of (2 ± 0,25) min and hold it for (3 ± 0,25) min before release. After release mark the tape at the outer edge of any load bearing buckle or adjusting device. Undo the load bearing buckle or any adjusting device and measure the distance between the two marks.

5.2.7 Type D harnesses

5.2.7.1 Put the harness on a rigid test dummy according to Figure 2 and attach it with a single rope, according to EN 892, to the test machine in accordance with the instructions for use.

5.2.7.2 Load the harness gradually up to (800 ± 10) N in the head up position of the dummy. Under this load, the rope attachment points should be placed approximately symmetrically about the plane of symmetry of the dummy.

5.2.7.3 In the head down position of the dummy, mark the tape at the outer edge of any load bearing buckle or adjusting device and apply a force increasing gradually to ($10^{+0,3}_{0}$) kN over a period of (2 ± 0,25) min. Hold this force for (1 ± 0,25) min and then release the tension completely over a maximum of 1 min. Reapply the force immediately and increase gradually to ($10^{+0,3}_{0}$) kN as before and hold the force for (3 ± 0,25) min before release. After release mark the tape at the outer edge of any load bearing buckle or adjusting device. Undo the load bearing buckle or adjusting device and measure the distance between the two marks.

6 Marking

Harnesses shall carry a label which will be marked with at least the following items which shall be given at least in the official language(s) of the state of destination within the European Community:

a) name of the manufacturer or its representative in the European Community;

b) type of the harness in accordance with 3.1;

c) model designation (if several models are marketed by the manufacturer);

d) size, if applicable;

e) pictogram showing how to fasten and secure any buckles or adjusting devices;

f) maximum weight and size ranges, only for type B harnesses;

g) label or pictogram to indicate that they shall not be used alone, only for type D harnesses;

h) year of manufacture;

i) pictogram, which advises the user to read the information given by the manufacturer (see below).

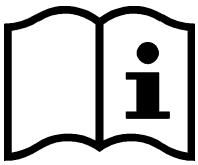

7 Information supplied by the manufacturer

The harness shall be supplied with an explanatory leaflet and written in at least the official language(s) of the state of destination within the European Community containing at least the following items:

a) advice that the product should only be used by trained and/or otherwise competent persons or the user should be under the direct supervision of a trained and/or otherwise competent person;

b) advice that, before using the harness, the user should carry out a suspension test in a safe place to ensure that the harness is the correct size, has sufficient adjustment and is of an acceptable comfort level for the intended use;

c) instruction for the proper way to put on the harness;

d) explanation of sizing details and how to obtain the optimum fit;

e) identification of rope attachment points and how to tie into them;

f) advice on the importance of regularly checking any buckles or adjusting devices during use;

g) advice on how attachment should be made to any connecting component or sub-system (e.g. for anchoring, belaying, ascending, abseiling or in a rescue situation);

h) instruction for the choice of other suitable components for use in the system;

i) advice on the importance of checking the whole harness regularly for any damage during use and the necessity to withdraw it from use if any damage or defect is found;

j) maximum weight and size ranges for type B harnesses;

k) advice on the risk of injury when used without a type C harness, only in the case of type D harnesses;

l) advice on the relative advantages and limitations of the harness or any combination with other harnesses;

m) advice on the effects of chemical reagents with which the product might come into contact;

n) instruction for the cleaning and/or disinfection of the product without adverse effects;

o) lifespan of the product or how to assess it;

p) instruction for the protection of the product during transportation;

q) advice on the need to consider how any rescue may be safely and efficiently carried out;

r) advice on the meaning of any markings on the product;

s) instructions for drying: after any wetting, without affecting its performance and subsequent correct storage;

t) advice on the effects of damp and icy conditions;

u) advice on the effects of storage and of ageing;

v) information, that the use of the harness is intended for mountaineering, including climbing.

Dimensions in millimetres

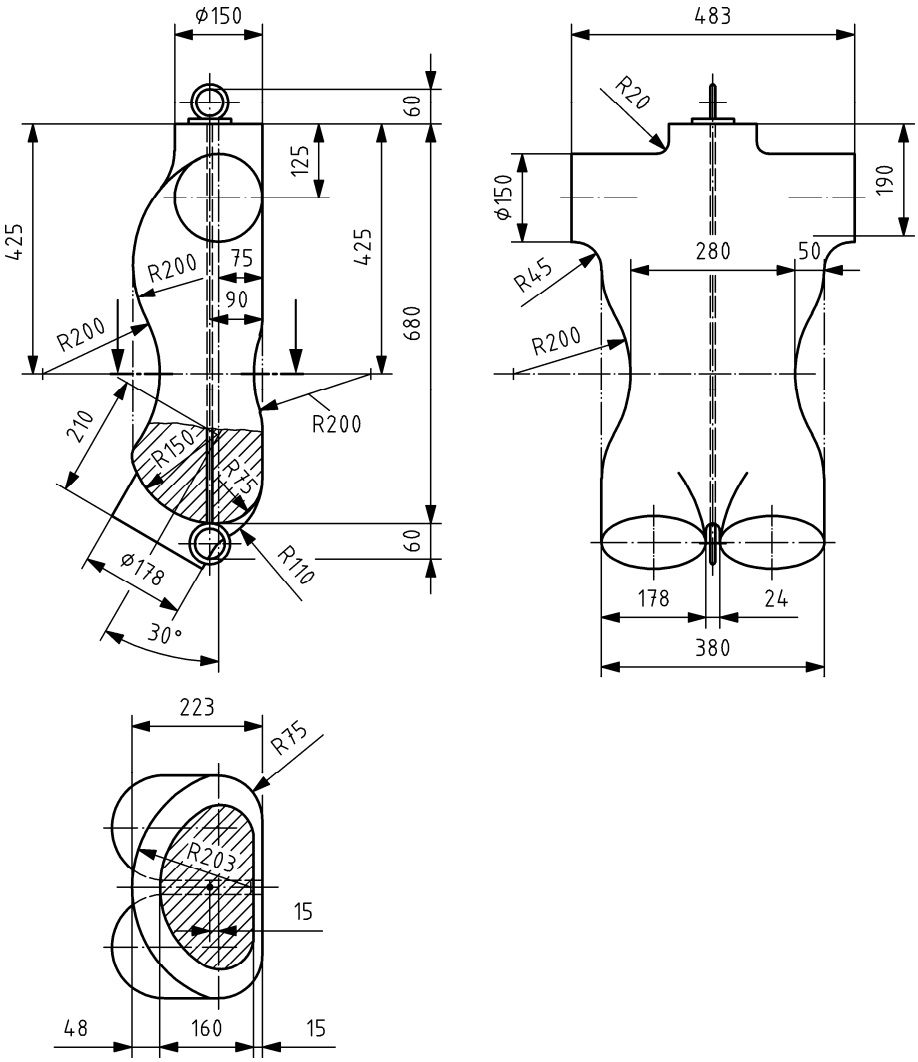

Figure 2 — Outline of test dummy

Dimensions in millimetres

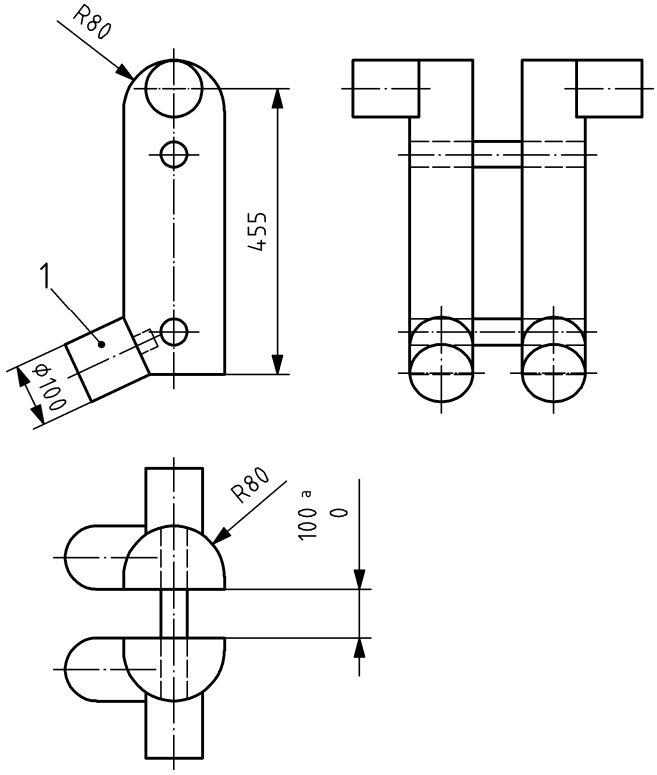

Key
1 adjustable from 0 mm to 100 mm
2 may be removable

Figure 3 — Outline of test dummy for type B harnesses testing

Dimensions in millimetres

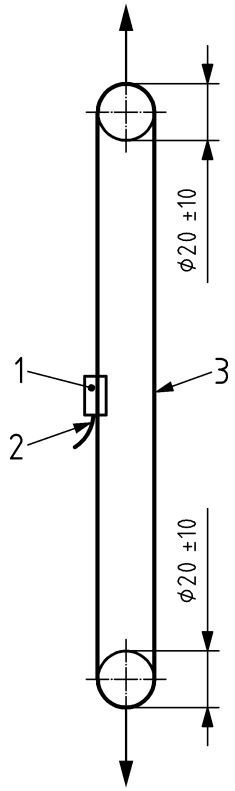

Key
1 buckle
2 position to be marking
3 waist belt of harness

Figure 4 — Arrangement for belt testing

Annex A
(informative)

Standards on mountaineering equipment

Table A.1 — List of standards on mountaineering equipment

No	Document	Title
1	EN 892	Mountaineering equipment — Dynamic mountaineering ropes — Safety requirements and test methods
2	EN 12275	Mountaineering equipment — Connectors — Safety requirements and test methods
3	EN 13089	Mountaineering equipment — Ice-tools — Safety requirements and test methods
4	EN 12277	Mountaineering equipment — Harnesses — Safety requirements and test methods
5	EN 12492	Mountaineering equipment — Helmets for mountaineers — Safety requirements and test methods
6	EN 564	Mountaineering equipment — Accessory cord — Safety requirements and test methods
7	EN 565	Mountaineering equipment — Tape — Safety requirements and test methods
8	EN 566	Mountaineering equipment — Slings — Safety requirements and test methods
9	EN 12276	Mountaineering equipment — Frictional anchors — Safety requirements and test methods
10	EN 12270	Mountaineering equipment — Chocks — Safety requirements and test methods
11	EN 567	Mountaineering equipment — Rope clamps — Safety requirements and test methods
12	EN 958	Mountaineering equipment — Energy absorbing systems for use in klettersteig (via ferrata) climbing — Safety requirements and test methods
13	EN 959	Mountaineering equipment — Rock anchors — Safety requirements and test methods
14	EN 568	Mountaineering equipment — Ice anchors — Safety requirements and test methods
15	EN 569	Mountaineering equipment — Pitons — Safety requirements and test methods
16	EN 893	Mountaineering equipment — Crampons — Safety requirements and test methods
17	prEN 15151	Mountaineering equipment — Descenders — Safety requirements and test methods
18	EN 12278	Mountaineering equipment — Pulleys — Safety requirements and test methods

Annex ZA
(informative)

Relationship between this European Standard and the Essential Requirements of EU Directive 89/686/EEC

This European Standard has been prepared under a mandate given to CEN by the European Commission and the European Free Trade Association to provide a means of conforming to Essential Requirements of the New Approach Directive 89/686/EEC on the approximation of the laws of the Member States relating to personal protective equipment.

Once this standard is cited in the Official Journal of the European Communities under that Directive and has been implemented as a national standard in at least one Member State, compliance with the clauses of this standard given in Table ZA.1 confers, within the limits of the scope of this standard, a presumption of conformity with the corresponding Essential Requirements of that Directive and associated EFTA regulations.

Table ZA.1 — Correspondence between this European Standard and Directive 89/686/EEC

Clause(s)/subclause(s) of this EN	Essential Requirements (ERs) of Directive 89/686/EEC	Qualifying remarks/ Notes
4.1.1	1.2.1 Absence of risks and other "inherent" nuisance factors	
4.2	1.3.2 Lightness and design strength	
6, 7	1.4 Information supplied by the manufacturer	
7	2.4 PPE subject to ageing	

WARNING: Other requirements and other EU Directives may be applicable to the product(s) falling within the scope of this standard.

BSI — British Standards Institution

BSI is the independent national body responsible for preparing British Standards. It presents the UK view on standards in Europe and at the international level. It is incorporated by Royal Charter.

Revisions

British Standards are updated by amendment or revision. Users of British Standards should make sure that they possess the latest amendments or editions.

It is the constant aim of BSI to improve the quality of our products and services. We would be grateful if anyone finding an inaccuracy or ambiguity while using this British Standard would inform the Secretary of the technical committee responsible, the identity of which can be found on the inside front cover.
Tel: +44 (0)20 8996 9000. Fax: +44 (0)20 8996 7400.

BSI offers members an individual updating service called PLUS which ensures that subscribers automatically receive the latest editions of standards.

Buying standards

Orders for all BSI, international and foreign standards publications should be addressed to Customer Services. Tel: +44 (0)20 8996 9001.
Fax: +44 (0)20 8996 7001. Email: orders@bsi-global.com. Standards are also available from the BSI website at http://www.bsi-global.com.

In response to orders for international standards, it is BSI policy to supply the BSI implementation of those that have been published as British Standards, unless otherwise requested.

Information on standards

BSI provides a wide range of information on national, European and international standards through its Library and its Technical Help to Exporters Service. Various BSI electronic information services are also available which give details on all its products and services. Contact the Information Centre.
Tel: +44 (0)20 8996 7111. Fax: +44 (0)20 8996 7048. Email: info@bsi-global.com.

Subscribing members of BSI are kept up to date with standards developments and receive substantial discounts on the purchase price of standards. For details of these and other benefits contact Membership Administration.
Tel: +44 (0)20 8996 7002. Fax: +44 (0)20 8996 7001.
Email: membership@bsi-global.com.

Information regarding online access to British Standards via British Standards Online can be found at http://www.bsi-global.com/bsonline.

Further information about BSI is available on the BSI website at http://www.bsi-global.com.

Copyright

BSI
389 Chiswick High Road
London
W4 4AL